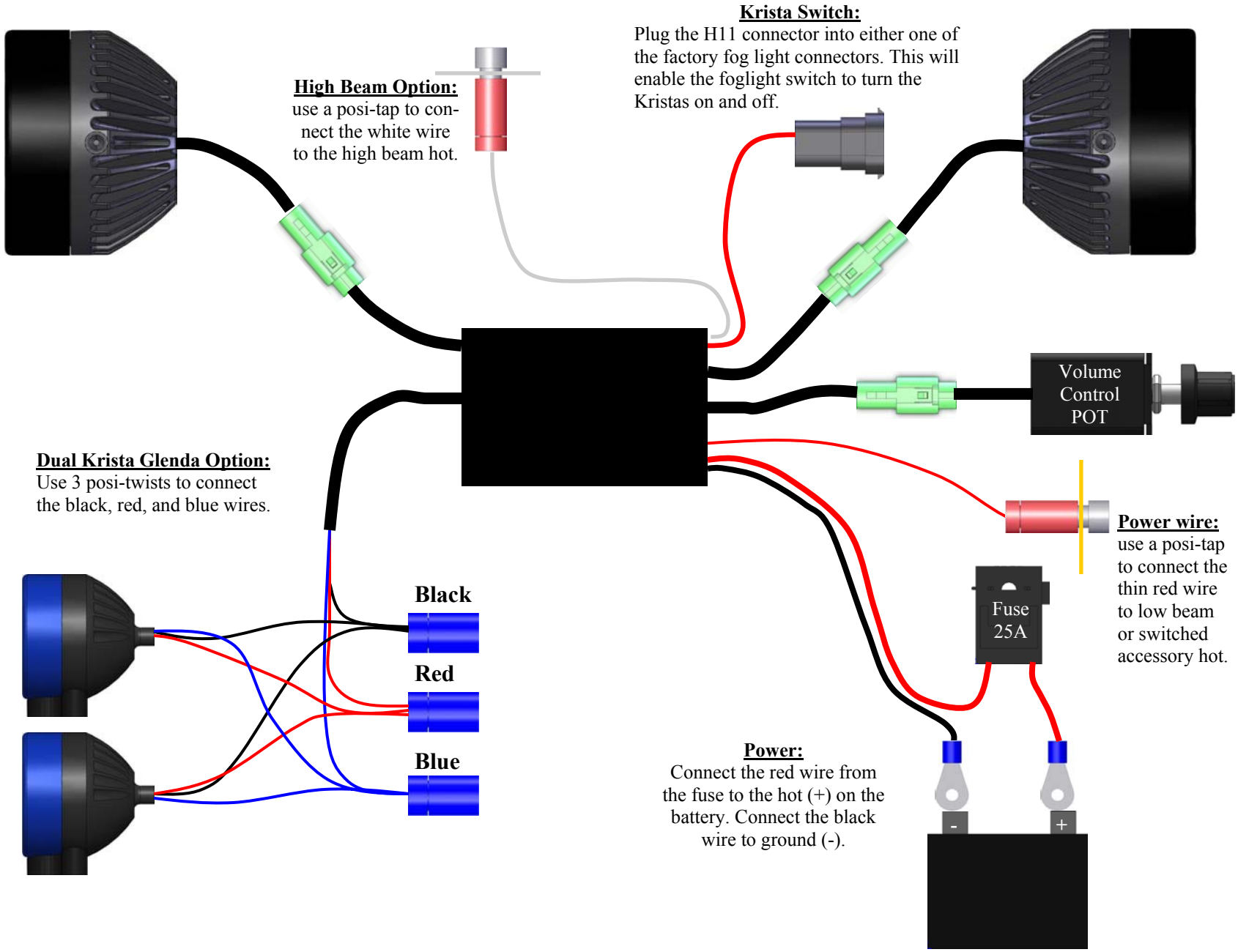Wiring Diagram for Krista & Glenda for R1200GSA